TCUV 2364

UV BI-TELECENTRIC LENS FOR DETECTORS UP TO 2/3”

WWW.OPTO-ENGINEERING.COM

Part Number		TCUV2364
Range	(nm)	365 / 420
Magnification		0,137 +/- 3%
Object Field	(mm x mm)	
with 1/4" (3,6 x 2,7) detector		26,2 x 19,7
with 1/3" (4,8 x 3,6) detector		34,9 x 26,2
with 1/2" (6,4 x 4,8) detector		46,6 x 34,9
with 1/1.8" (7,13 x 5,37) detector		51,9 x 39,1
with 2/3" (8,8 x 6,6) detector		64,1 x 48,0
Working Distance	(mm)	176,0 +/- 5
Working F-number		8
Telecentricity	(degree)	< 0,08
Distortion	(%)	< 0,08
Field Depth	(mm)	35,0
CTF @70 lp/mm	(%)	> 40
Image side N.A.		0,0620
Object side N.A.		0,0086
Mount		C
Length	(mm)	160,4
External diameter	(mm)	100,0
Weight	(g)	1100

ACCESSORIES AND OPTIONS:

Collimated/Telecentric illumination:
compatible with *LTCLUV64* and LTCL64/B illuminators.

Coaxial illumination:
Compatible with *LTCX64/UV* illuminators.

Back Ligth illumination:
Compatible with *LTBK80/UV* illuminator.

Clamping Mechanics:
compatible with *CMHO64.*

Direct illumination:
compatible with *LTRN64/UV* diffusive anular illuminators.

Filters:
filters can be inserted in the rear part of the lens, by means of *TC Filter Kit.*

MECHANICAL DRAWINGS: see next page >>

Rev No.	Description	Date	Name
A	First light	09/05/08	A.Vismara

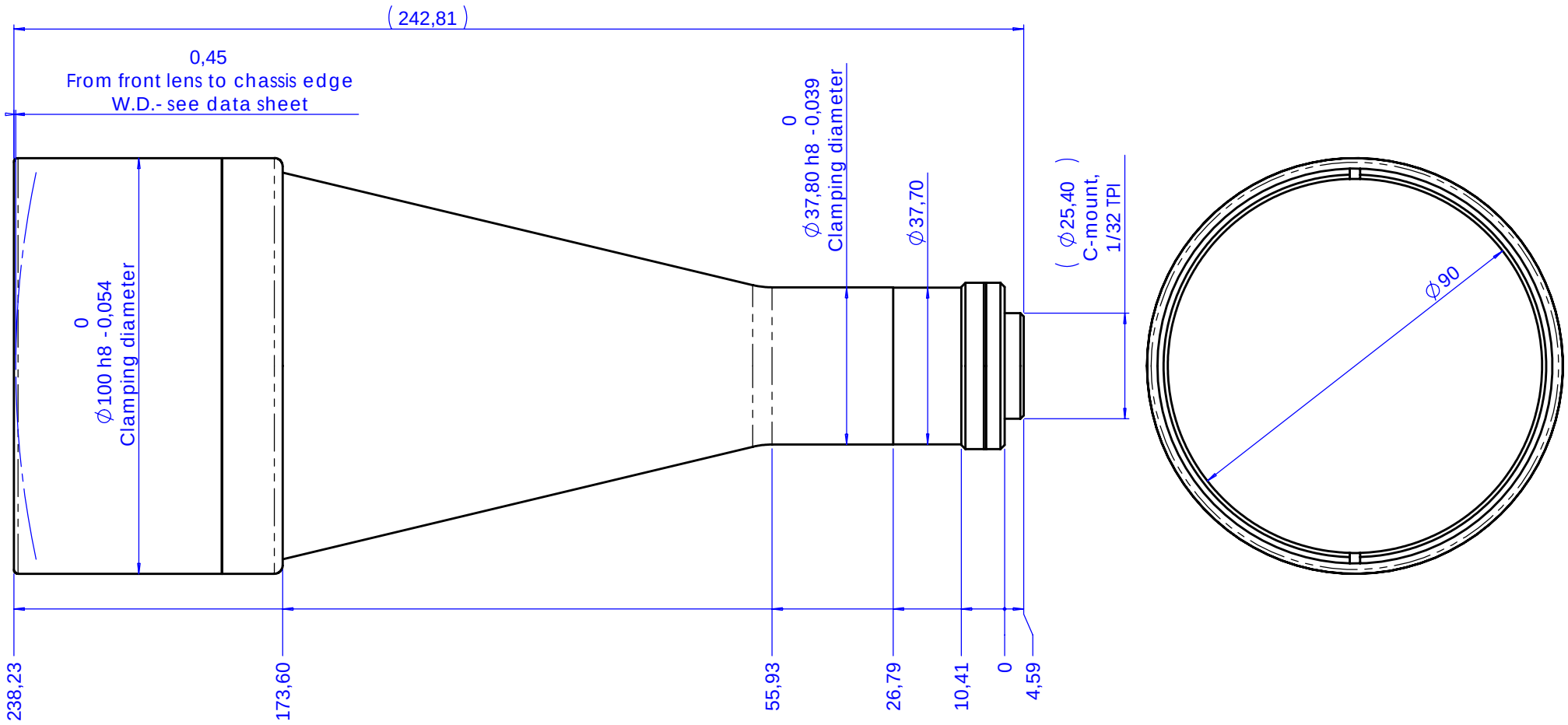

Material	N.A.	Mass	1.1 kg
Surface treatment	N.A.	Scale	1:1
Project-Prod.item/Instrument	Telecentric lens UV 23 64		

Geometrical tolerance (ISO 2768-2)	Class	K
Linear tolerance (ISO 2768-2)	Class	m

0.5 ÷3	>3÷ 6	>6÷ 30	>30÷ 120	>120 ÷400	>400÷ 1000	>1000 ÷2000	>2000 ÷4000
±0.1	±0.1	±0.2	±0.3	±0.5	±0.8	±1.2	±2

Undimensioned bevels	1x45°
Undimensioned radii	R 0.5

Description: Assembly

	Date	Name
Designed	09/05/08	A.Vismara
Draw	09/05/08	A.Vismara
Checked	X	C. Sedazzari

Drawing No. 02624-0-A

Sheet 1/1

Reproduction forbidden without specific authorization

www.opto-engineering.com
OPTO ENGINEERING S.r.l. - 46100 Mantova Italy - Via Cremona, 29/2 - Tel. +39 0376 263565 - e-mail: info@opto-engineering.com - http://www.opto-engineering.com