# TCUV 1280

## UV BI-TELECENTRIC LENS FOR DETECTORS UP TO 1/2”

WWW.OPTO-ENGINEERING.COM

| Part Number | | TCUV1280 |
|---|---|---|
| **Range** | **(nm)** | 365 / 420 |
| **Magnification** | | 0,080 +/- 3% |
| **Object Field** | **(mm x mm)** | |
| *with 1/4" (3,6 x 2,7) detector* | | 44,8 x 33,6 |
| *with 1/3" (4,8 x 3,6) detector* | | 59,8 x 44,8 |
| *with 1/2" (6,4 x 4,8) detector* | | 79,7 x 59,8 |
| *with 1/1.8" (7,13 x 5,37) detector* | | 88,8 x 66,9 |
| *with 2/3" (8,8 x 6,6) detector* | | diam. = 82,2 |
| **Working Distance** | **(mm)** | 221,0 +/- 7 |
| **Working F-number** | | 8 |
| **Telecentricity** | **(degree)** | < 0,08 |
| **Distortion** | **(%)** | < 0,08 |
| **Field Depth** | **(mm)** | 102,0 |
| **CTF @70 lp/mm** | **(%)** | > 40 |
| **Image side N.A.** | | 0,0620 |
| **Object side N.A.** | | 0,0050 |
| **Mount** | | C |
| **Length** | **(mm)** | 264,3 |
| **External diameter** | **(mm)** | 116,0 |
| **Weight** | **(g)** | 1560 |

Possible vignetting at the image corners with 1/1.8" detectors

## ACCESSORIES AND OPTIONS:

***Collimated/Telecentric illumination:***
compatible with *LTCLUV80* and *LTCL80/B* illuminators.

***Coaxial illumination:***
Compatible with *LTCX64/UV* illuminators.

***Back Ligth illumination:***
Compatible with *LTBK80/UV* illuminator.

***Clamping Mechanics:***
compatible with *CMHO80.*

***Direct illumination:***
compatible with *LTRN64/UV* diffusive anular illuminators.

***Filters:***
filters can be inserted in the rear part of the lens, by means of *TC Filter Kit.*

**MECHANICAL DRAWINGS: see next page >>**

| Rev No. | Description | Date | Name |
|---|---|---|---|
| A | First light | 09/05/08 | A.Vismara |
| | | | |
| | | | |

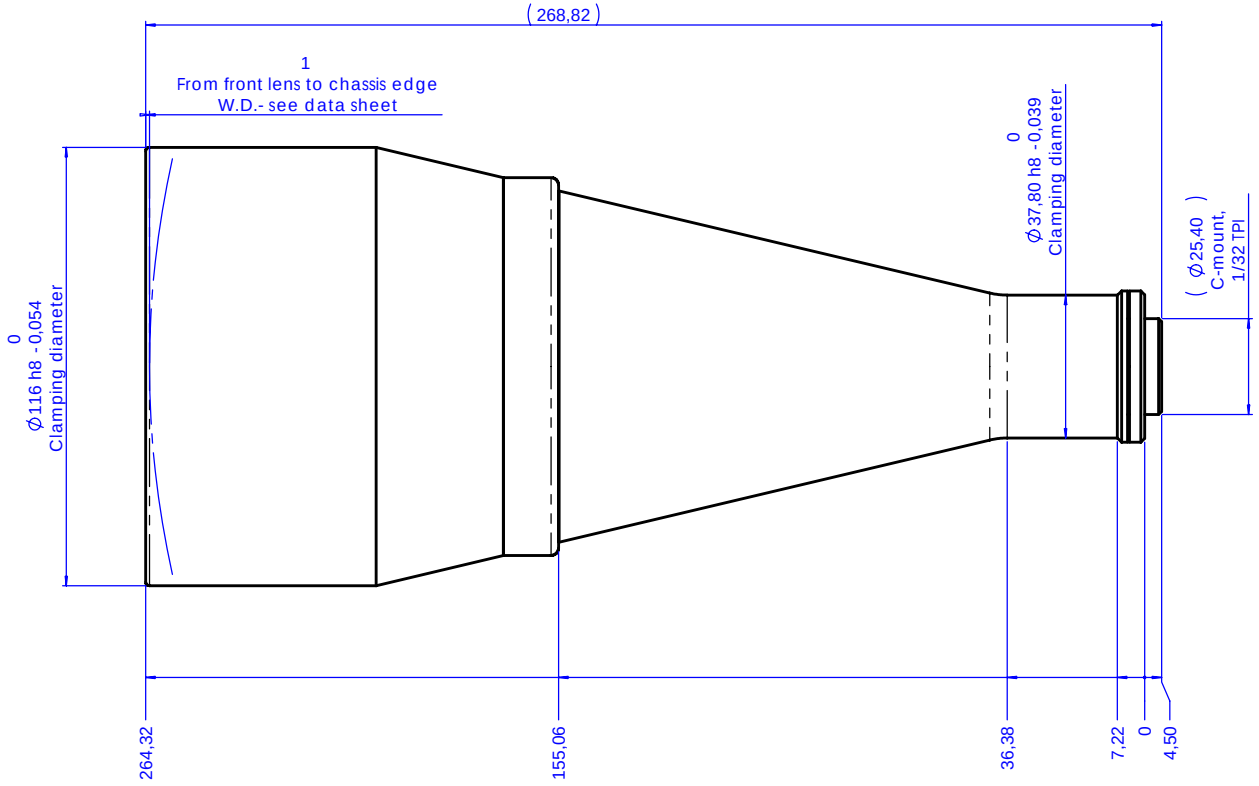


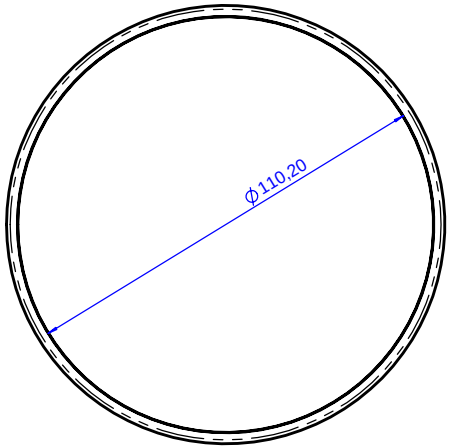


| | | | |
|---|---|---|---|
| Material | N.A. | Mass | 1.56 kg |
| Surface treatment | N.A. | Scale | 1:1 |
| Project-Prod.item/Instrument | Telecentric lens UV 12 80 | | |
| Description | Assembly | | |
| Drawing No. | 02630-0-A | Sheet | 1/1 |

| Geometrical tolerance (ISO 2768-2) | | | | | | | | | Class | K | Undimensioned bevels | 1x45° |
|---|---|---|---|---|---|---|---|---|---|---|---|---|
| Linear tolerance (ISO 2768-2) | | | | | | | | | Class | m | | |
| 0.5 ÷3 | >3÷ 6 | >6÷ 30 | >30÷ 120 | >120 ÷400 | >400÷ 1000 | >1000 ÷2000 | >2000 ÷4000 | Undimensioned radii | | | | R 0.5 |
| ±0.1 | ±0.1 | ±0.2 | ±0.3 | ±0.5 | ±0.8 | ±1.2 | ±2 | | | | | |

| | Date | Name |
|---|---|---|
| Designed | 09/05/08 | A.Vismara |
| Draw | 09/05/08 | A.Vismara |
| Checked | X | C.Sedazzari |

www.opto-engineering.com

Reproduction forbidden without specific authorization

OPTO ENGINEERING S.r.l. - 46100 Mantova Italy - Via Cremona, 29/2 - Tel. +39 0376 263565 - e-mail: info@opto-engineering.com - http://www.opto-engineering.com