TCUV 1248

UV BI-TELECENTRIC LENS FOR DETECTORS UP TO 1/2”

WWW.OPTO-ENGINEERING.COM

Part Number		TCUV1248
Range	**(nm)**	365 / 420
Magnification		0,133 +/- 3%
Object Field	**(mm x mm)**	
with 1/4" (3,6 x 2,7) detector		27,0 x 20,2
with 1/3" (4,8 x 3,6) detector		36,0 x 27,0
with 1/2" (6,4 x 4,8) detector		47,9 x 36,0
with 1/1.8" (7,13 x 5,37) detector		53,4 x 40,2
with 2/3" (8,8 x 6,6) detector		diam. = 49,4
Working Distance	**(mm)**	130,7 +/- 4
Working F-number		8
Telecentricity	**(degree)**	< 0,08
Distortion	**(%)**	< 0,08
Field Depth	**(mm)**	37,0
CTF @70 lp/mm	**(%)**	> 40
Image side N.A.		0,0620
Object side N.A.		0,0083
Mount		C
Length	**(mm)**	176,1
External diameter	**(mm)**	75,0
Weight	**(g)**	670

Possible vignetting at the image corners with 1/1.8" detectors

ACCESSORIES AND OPTIONS:

Collimated/Telecentric illumination:
compatible with *LTCLUV48* and LTCL48/B illuminators.

Coaxial illumination:
Compatible with *LTCX36/UV* illuminators.

Back Ligth illumination:
Compatible with *LTBK48/UV* illuminator.

Clamping Mechanics:
compatible with *CMHO48.*

Direct illumination:
compatible with *LTRN36/UV* diffusive anular illuminators.

Filters:
filters can be inserted in the rear part of the lens, by means of *TC Filter Kit.*

MECHANICAL DRAWINGS: see next page >>

Rev No.	Description	Date	Name
A	First light	09/05/08	A.Vismara

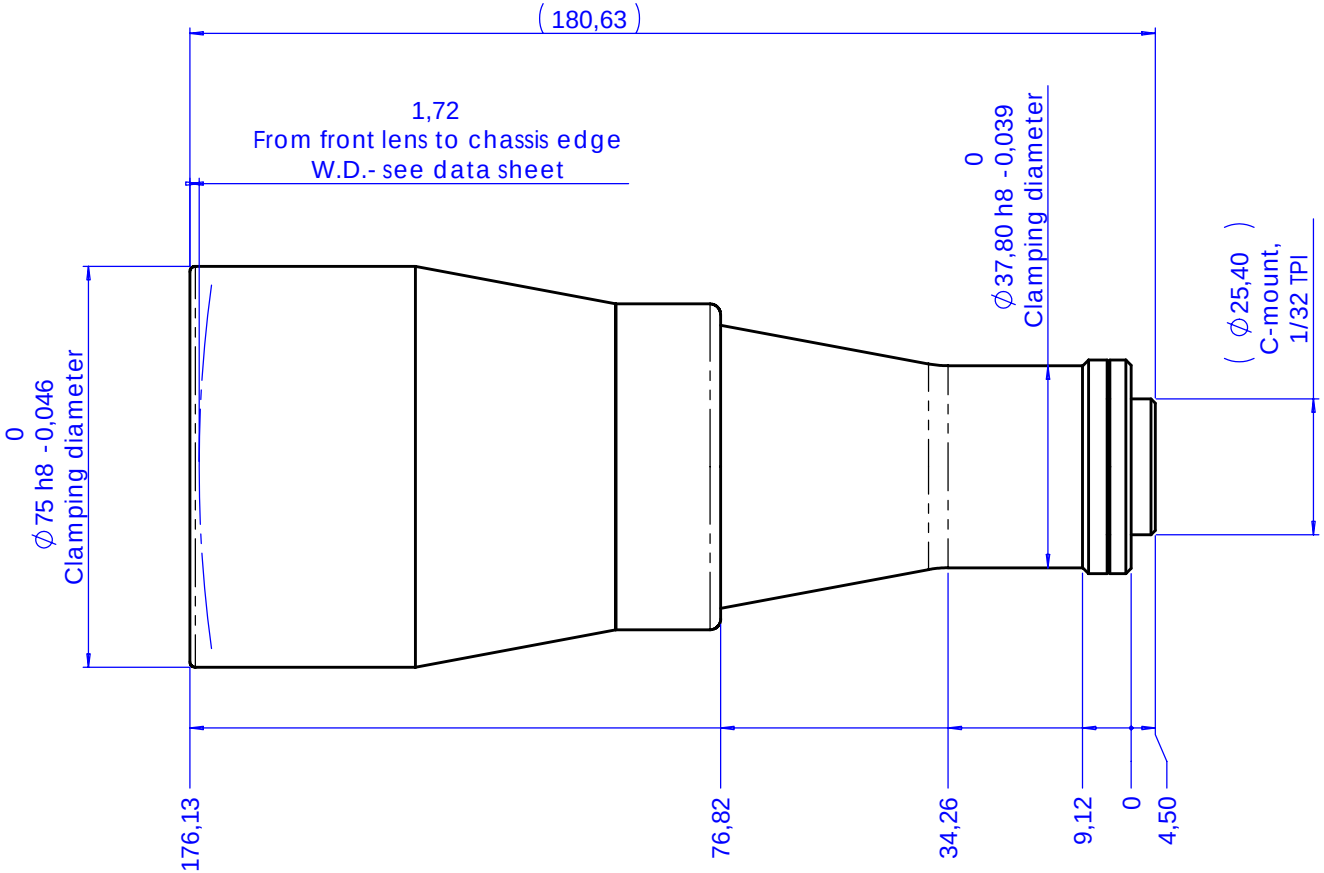

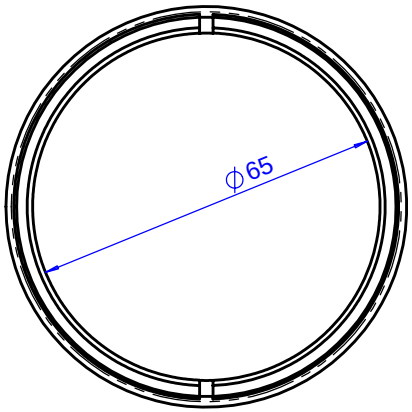

Material	N.A.	Mass	0.67 kg
Surface treatment	N.A.	Scale	1:1
Project-Prod.item/Instrument	Telecentric lens UV 12 48		

Geometrical tolerance (ISO 2768-2)								Class	K
Linear tolerance (ISO 2768-2)								Class	m
0.5 ÷3	>3÷ 6	>6÷ 30	>30÷ 120	>120 ÷400	>400÷ 1000	>1000 ÷2000	>2000 ÷4000	Undimensioned bevels	1x45°
±0.1	±0.1	±0.2	±0.3	±0.5	±0.8	±1.2	±2	Undimensioned radii	R 0.5

Description: Assembly

	Date	Name
Designed	09/05/08	A.Vismara
Draw	09/05/08	A.Vismara
Checked	X	C. Sedazzari

Drawing No. 02627-0-A

Sheet 1/1

Reproduction forbidden without specific authorization

www.opto-engineering.com
OPTO ENGINEERING S.r.l. - 46100 Mantova Italy - Via Cremona, 29/2 - Tel. +39 0376 263565 - e-mai: info@opto-engineering.com - http://www.opto-engineering.com