Rev No.	Description	Date	Name

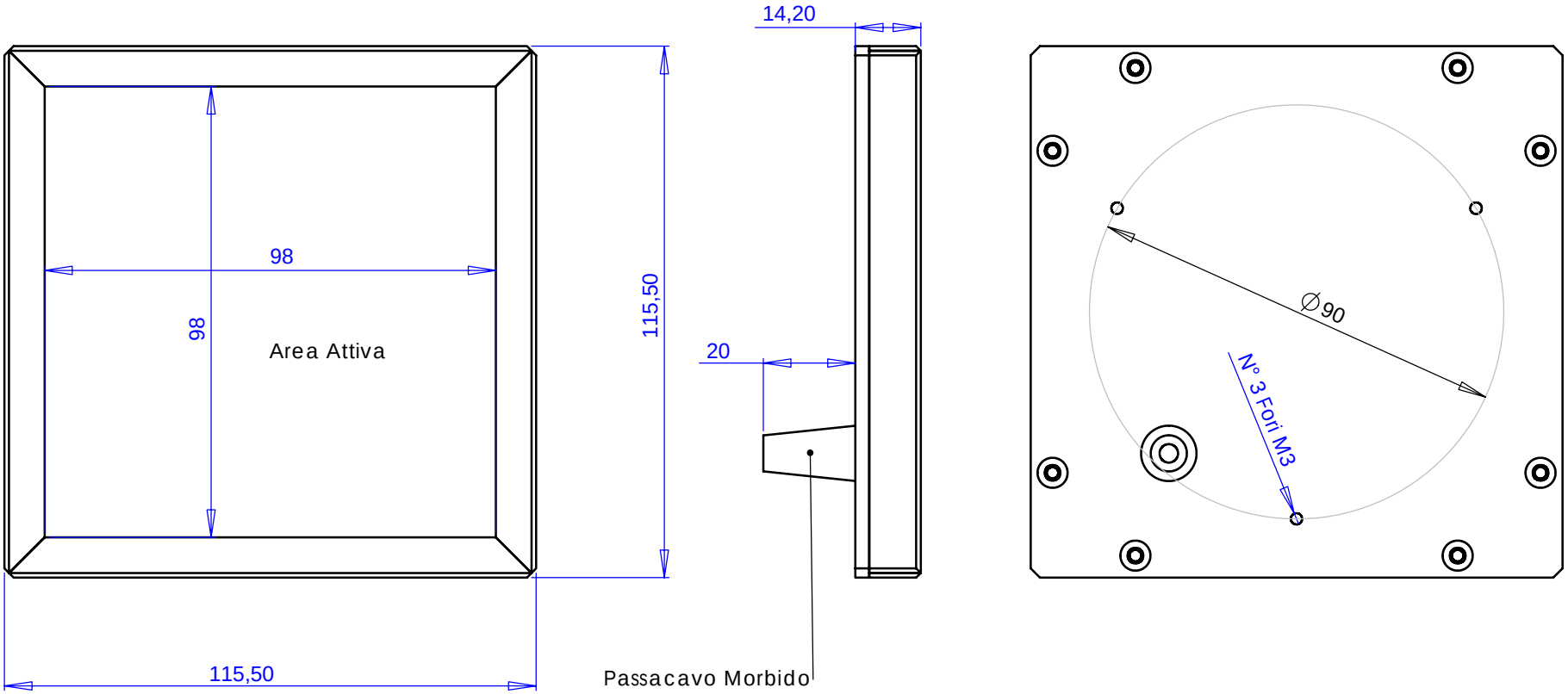

Material									Mass	Scale 1:1
Surface treatment									Project-Prod.item/Instrument LT BK 64	
Geometrical tolerance (ISO 2768-2)							Class K	Undimensioned bevels	1x45°	Description Ingombri LT BK 64
Linear tolerance (ISO 2768-2)							Class m	Undimensioned radii	R 0.5	
0.5 ÷3	>3÷ 6	>6÷ 30	>30÷ 120	>120 ÷400	>400÷ 1000	>1000 ÷2000	>2000 ÷4000			
±0.1	±0.1	±0.2	±0.3	±0.5	±0.8	±1.2	±2			

	Date	Name
Designed	17/03/05	A. Bnà
Draw	17/03/05	A. Bnà
Checked	X	C. Sedazzari

Drawing No. Ingombri LT BK 64 — Sheet 1/1

Reproduction forbidden without specific authorization

www.opto-engineering.com
OPTO ENGINEERING S.r.l. - 46100 Mantova Italy - Via Cremona, 28 - Tel/fax +39 0376 229585 - e-mai: info@opto-enginering.it - http://www.opto-engineering.com